HN-P-25M Series Lens

HN-P-1624-25M-C1.2/1

- F=16mm
- 2.74μm
- F2.4
- for 1.2 type Cameras, 25 Megapixel
- Ultra-low optical distortion
- Miniaturized structure

Specifications

Model		HN-P-1624-25M-C1.2/1
Sensor Size		1.2"
Pixel size (μm)		2.74
Focal Length (mm)		15.96±5%
Total Track Length (mm)		75±0.2
Flange distance (mm)		17.526±0.2
F/No.		F2.4-F16
Angle of View (D×H×V)		61.36° × 48.83° × 42.86°
Distortion (%)	Optical Distortion	-0.53
	TV Distortion	0.07
Basic Working Distance (mm)		300
Focus Range		0.1m- ∞
Filter Thread		M40.5×0.5-7H
Mount		C-mount
Dimensions (mm)		Φ42.50 × 59.76 (w/o thread)

Technical Drawing

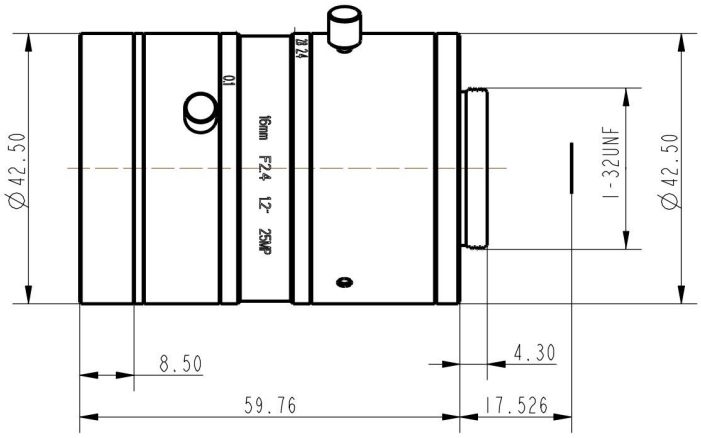

China Daheng Group, Inc. Beijing Image Vision Technology Branch

12F Daheng Science & Technology Tower, No.3 Suzhou Street, Haidian District,

Beijing China, 100080

Tel: +86 10 82828878

E-mail: isales@daheng-imaging.com

Specifications are subject to change without prior notice.
Copyright © 2021 China Daheng Group, Inc. Beijing Image Vision Technology Branch. All rights reserved.