MERCURY SERIES

MER-160-227U3M/C

- Ultra small, light and robust
- 1/2.9" Global Shutter CMOS sensor
- Compatible with GenICam™ and USB3 Vision®
- USB3.0 Interface
- 1.6 Megapixels
- 2 Programmable GPIOs
- Very attractive price

The MERCURY USB3.0 series (MER-U3) camera is DAHENG IMAGING's mature area scan industrial digital camera, featuring outstanding performance, compact design and extremely low noise.

The MER-160-227U3M/C camera is a monochrome/color USB3 Vision camera with the Sony IMX273 CMOS sensor. Thanks to the extremely compact (29mm × 29mm × 29mm), robust metal housings and locking screw connectors, the MERCURY cameras can secure the reliability of cameras deployed in harsh environments.

The MER-160-227U3M/C camera is powered over the USB interface. The MER-160-227U3M/C camera has opto-isolated I/Os. The GPIOs give MER-U3 maximum flexibility to adapt to specific needs. The camera has an outstanding price/performance ratio.

The MERCURY family cameras are especially suitable for machine vision applications such as industrial inspection, medical, scientific research, education, security and so on.

Features

- USB3.0 interface with 10-bit or 8-bit Mono/Bayer output
- Programmable ROI, increased frame rate with partial scan
- Gain, exposure and white balance programmable (white balance only for color models)
- Support auto gain, auto exposure and auto white balance (auto white balance only for color models)
- Three acquisition controls: Continuous acquisition/ Software trigger acquisition/ External trigger acquisition
- Flash sync for firing external lights at precisely the moment when exposure is performed
- Adjustable URB
- Software reset function
- Storable user sets
- Robust full metal housing and optional lockable devices
- Hot plugging available
- Compatible with GenICam™ and USB3 Vision®, support a variety of 3rd-party software such as HALCON, MERLIC and LabVIEW
- Optimized software package for 32/64bit Windows, and support Linux, Android, ARMv7 and ARMv8
- Multiple samples and easy-to-integrate SDKs for various programming tools
- Regulations: CE, RoHS, FCC, GenICam, USB3 Vision

Performance Specifications

Model	MER-160-227U3M/C
Interface	USB3.0
Resolution	1440(H) × 1080(V)
Frame rate	227 fps
Sensor	1/2.9",Global Shutter Sony IMX273 CMOS
Pixel size	3.45 μm × 3.45 μm
Pixel Bit Depth	8bit, 10bit
Spectrum	Monochrome / Color
Exposure time	20μs ~ 1s

Optical Specifications

Lens mount	C-Mount (standard), CS-Mount (optional)

Electrical Specifications

Power requirement	5 VDC via USB cable
I/Os	1 input / 1 output, 2 GPIOs
Data interface	Micro B
Power consumption	<2.7W @5V DC

Environmental Specifications

Operating temp.	0°C ~ +45°C
Storage temp.	-20°C ~ +70°C
Operating humidity	10% ~ 80%

Mechanical Specifications

Weight	57g
Dimensions	29(W)×29(H)×29(L)mm, w/o connectors

Technical Drawing

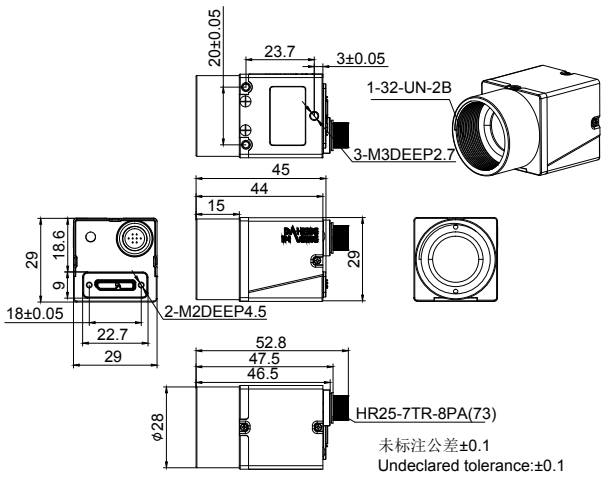

Units: mm

Spectral Response

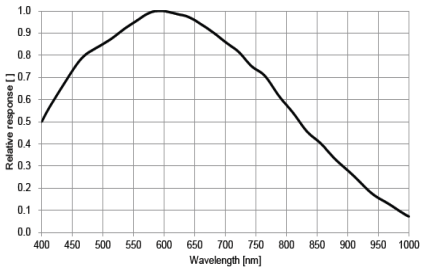

MER-160-227U3M

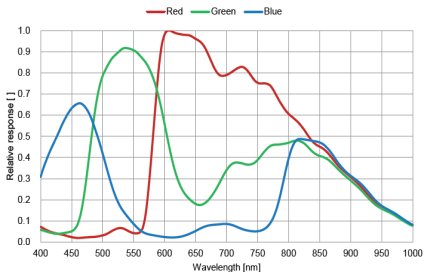

MER-160-227U3C

China Daheng Group, Inc. Beijing Image Vision Technology Branch

12F Daheng Science & Technology Tower, No.3 Suzhou Street, Haidian District,

Beijing China, 100080

Tel: +86 10 82828878

E-mail: isales@daheng-imaging.com

For more information please visit : www.daheng-imaging.com/en

Specifications are subject to change without prior notice.

Copyright © 2021 China Daheng Group, Inc. Beijing Image Vision Technology Branch. All rights reserved.

October 14, 2021