MERCURY2 SERIES

MER2-231-41GM/C

- 2.3 Megapixels
- 1/1.2" global shutter CMOS sensor
- Ultra small, light and robust
- Compatible with GenICam™ and GigE Vision®
- Gigabit Ethernet interface
- 2 programmable GPIOs

The MERCURY2 GigE series (MER2-G) camera is DAHENG IMAGING's new generation industrial digital camera. With improved built-in ISP algorithms, MER2-G series camera supports Decimation, Binning, Digital Shift and more features. Providing multiple acquisition controls, the camera can adapt to various vision applications.

The MER2-231-41GM/C camera is a monochrome/color GigE Vision camera with the Sony IMX249 CMOS sensor. Thanks to the extremely compact (29mm × 29mm × 29mm), robust metal housings and locking screw connectors, the MERCURY2 cameras can secure the reliability of cameras deployed in harsh environments. The MER2-231-41GM/C camera has opto-isolated I/Os. The GPIOs give MER2-G cameras maximum flexibility to adapt to specific needs.

The MERCURY2 family cameras are especially suitable for machine vision applications such as industrial inspection, medical, scientific research, education, security and so on.

Features

- Programmable ROI, increased frame rate with partial scan
- Gain, exposure and white balance programmable (white balance only for color models)
- Support auto gain, auto exposure and auto white balance (auto white balance only for color models)
- Four acquisition controls: Single frame acquisition / Continuous acquisition / Software trigger acquisition / External trigger acquisition
- Trigger mode: Frame Start /Frame Burst Start
- Support Decimation, Binning, Black Level, Digital Shift and Reverse X/Y(horizontal and vertical mirroring)
- Adjustable Gamma and Sharpness for optimizing the brightness and sharpness of images
- Color models support Light source preset, Color Transformation Control and Saturation
- Monochrome models support Noise Reduction
- Programmable LUTs and storable user sets
- Support Timer and Counter
- Adjustable packet-size and packet-delay, and reserved bandwidth
- Support Remove Parameter Limit to expand the range of exposure, gain, white balance, and so on
- Compatible with GenICam™ and GigE Vision®, can be used in a wide range of 3rd-party software such as HALCON, MERLIC and LabVIEW directly
- Optimized software package for 32/64bit Windows, and support Linux, ARMv7, ARMv8 and Mac OS
- Multiple samples and easy-to-integrate SDKs for various programming tools
- Regulations: CE, RoHS, GenICam, GigE Vision

Performance Specifications

Model	MER2-231-41GM/C
Interface	GigE
Resolution	1920(H) × 1200(V)
Frame rate	41 fps @1920 × 1200
Sensor	1/1.2" Sony IMX249 Global shutter CMOS
Pixel size	5.86 μm × 5.86 μm
Pixel Bit Depth	8bit, 10bit
Spectrum	Monochrome / Color
Exposure time	20μs~1s

Optical Specifications

Lens mount	C-Mount (standard), CS-Mount (optional)

Technical Drawing

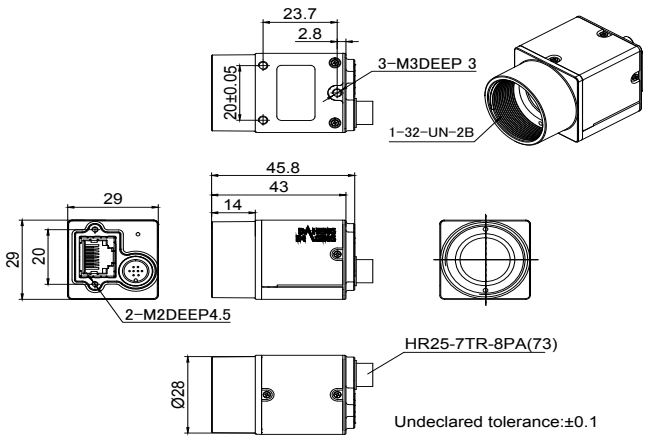

Units: mm

Electrical Specifications

Power requirement	12~24 VDC via 8-Pin connector
I/Os	1 input / 1 output, 2 GPIOs
Data interface	RJ45
Power consumption	<3W@24VDC

Environmental Specifications

Operating temp.	0°C ~ +45°C
Storage temp.	-20°C ~ +70°C
Operating humidity	10% ~ 80%

Mechanical Specifications

Weight	62g
Dimensions	29(W)x29(H)x29(L)mm, w/o connectors

Spectral Response

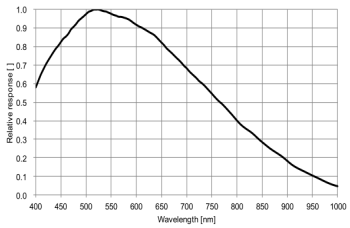

MER2-231-41GM

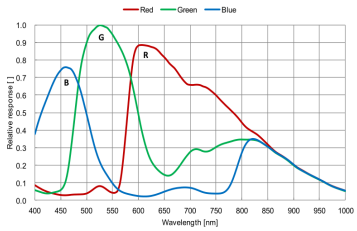

MER2-231-41GC

China Daheng Group, Inc. Beijing Image Vision Technology Branch

12F Daheng Science & Technology Tower, No.3 Suzhou Street, Haidian District,

Beijing China, 100080

Tel: +86 10 82828878

E-mail: isales@daheng-imaging.com

For more information please visit: www.daheng-imaging.com/en

Specifications are subject to change without prior notice.

Copyright © 2021 China Daheng Group, Inc. Beijing Image Vision Technology Branch. All rights reserved.

March 03, 2022